YAKIMA® Spare Parts FoldClick 2 & 3

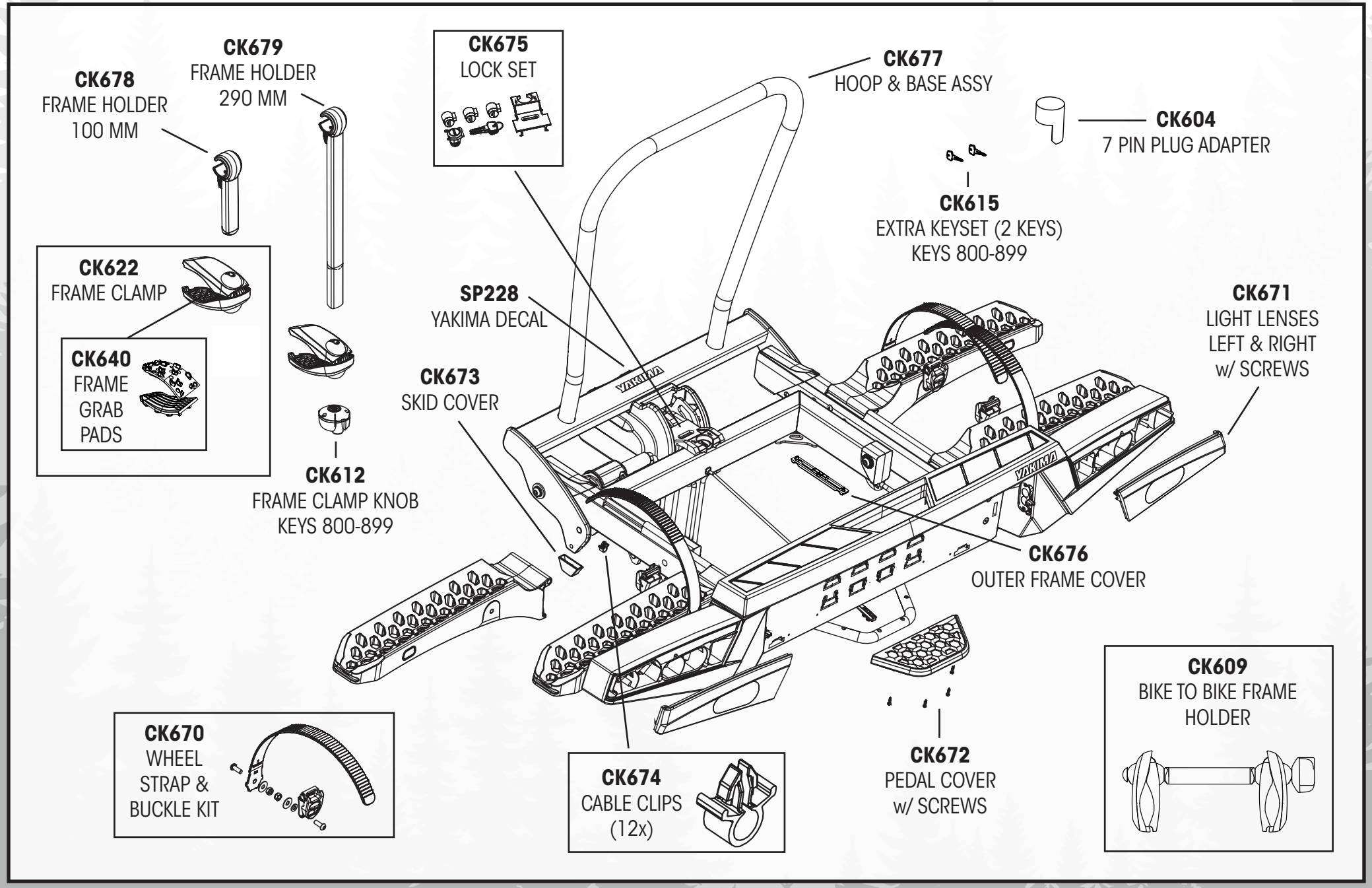

Rev0.9